CONNECTOR PINOUT	
PIN NO.	DESIGNATION
1	XH
2	YH
3	XL
4	YL

FOUR-WIRE (A4) TOUCHSCREEN

SCN-A4-FLT05.7-001-0H1-R

PART NUMBER: E391072

PART NO. E391072

NOTES:
1. FINISHED PART THICKNESS 1.4±.2mm.
2. PET SURFACE ON NEAR SIDE DRAWING VIEW.

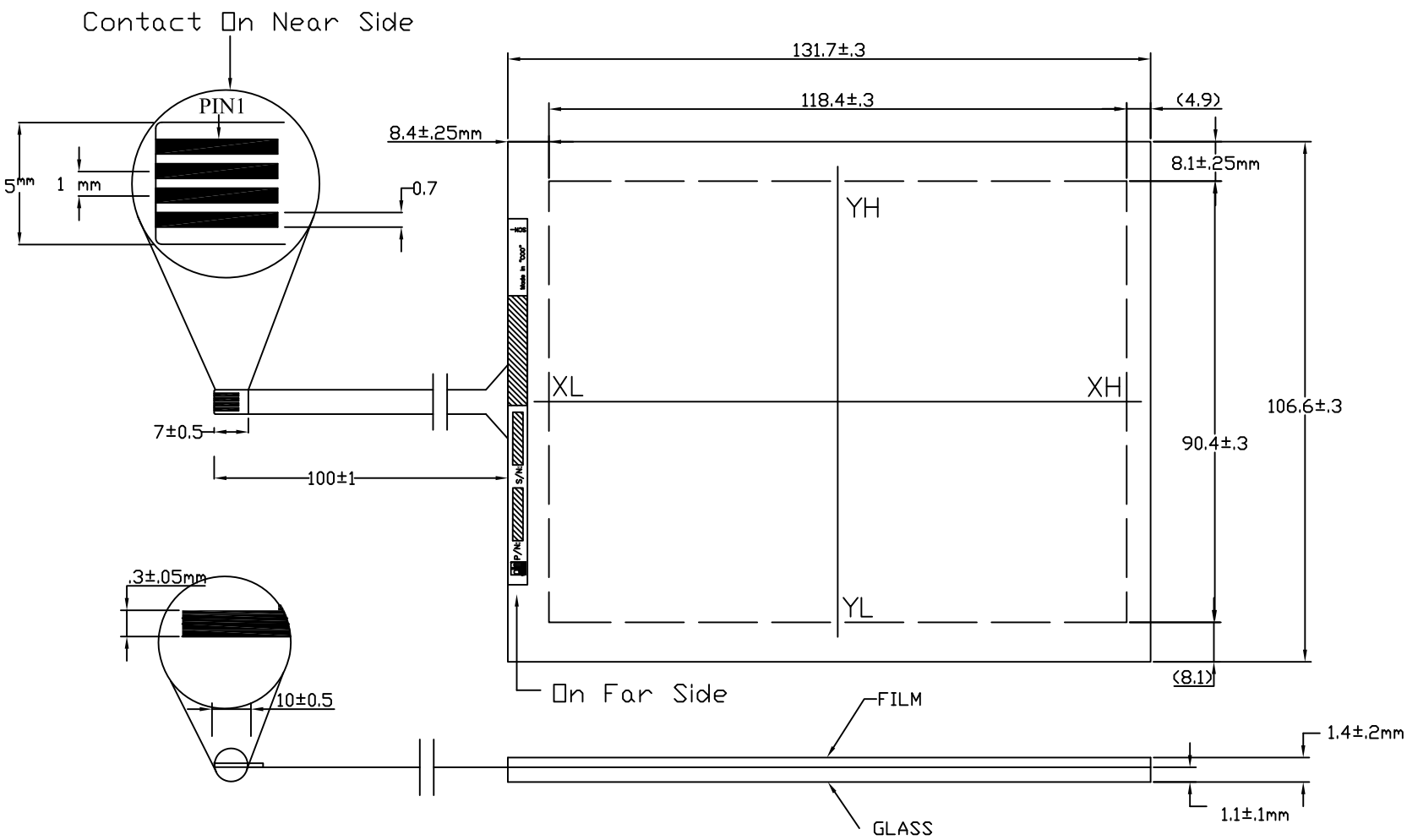

LTR	REVISION RECORD	DATE	DWN	APVD
B	Release Per ECO-09-017420 to Production	7-27-09	XS	BDP
A	Release Per ECO-09-015952	7-07-09	XS	BDP

DIMENSIONS: mm

TOLERANCES UNLESS OTHERWISE SPECIFIED:
0 PLC ± 1
1 PLC ± 0.3
2 PLC ± N/A
3 PLC ± N/A
4 PLC ± N/A
ANGLES ± 5
SURFACE TEXTURE N/A

DWN X. Sen	06/09/09	MATERIAL AT4 FOUR-WIRE (RESISTIVE)	HEAT TREAT N/A N/A
CHK B. Pennington	6-19-09	Tyco Electronics	Tyco Electronics Corporation Harrisburg, PA 17105-3608
APVD B. Pennington	6-19-09		
NAME MARKETING DRAWING SCN-A4-FLT05.7-001-0H1-R			
SCALE 1:1	SIZE A2	DRAWING NO MS600657	SHEET 1 OF 1 REV B

DWG NO MS600657

THIS DRAWING IS A CONTROLLED DOCUMENT.

THIS INFORMATION IS CONFIDENTIAL AND PROPRIETARY TO TYCO ELECTRONICS CORPORATION AND ITS WORLDWIDE SUBSIDIARIES AND AFFILIATES. IT MAY NOT BE DISCLOSED TO ANYONE OTHER THAN TYCO ELECTRONICS PERSONNEL WITHOUT WRITTEN AUTHORIZATION FROM TYCO ELECTRONICS CORPORATION, HARRISBURG, PENNSYLVANIA USA.

LOC 08
DIST 08

AMP 3307-7 REV 31MAR2000