CONNECTOR PINOUT	
PIN NO.	DESIGNATION
1	H
2	X
3	S
4	Y
5	L

ACCUTOUCH® TOUCHSCREEN
SCN-AT-FLT15.1-Z01-0H1
ELO P/N: D30900-000

NOTES:

1. GLASS THICKNESS 3.18mm NOMINAL [.125].
2. FINISHED PART THICKNESS 3.48mm NOMINAL [.137].
3. FINISHED PART THICKNESS AT CABLE ATTACHMENT AREA 4.24mm MAX [.167].
4. LABEL TO BE ATTACHED TO FRONT SIDE OF CABLE.
5. CABLE IS ATTACHED TO THE LEFT SIDE OF TOUCHSCREEN AT CENTER POINT AS SHOWN.
6. FINISHED PART THICKNESS AT THE COVERSHEET CONTACT 3.86mm MAX [.152].

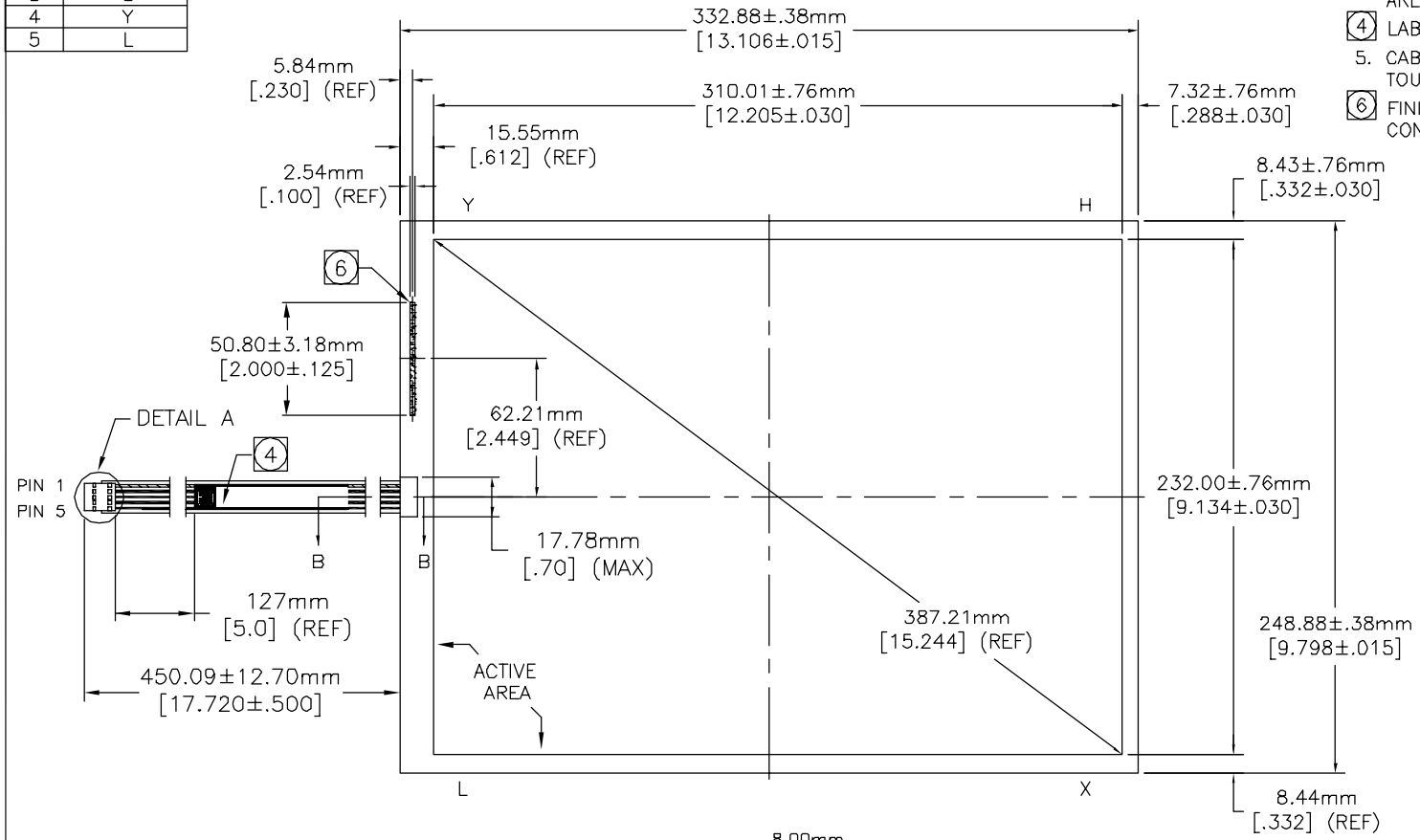

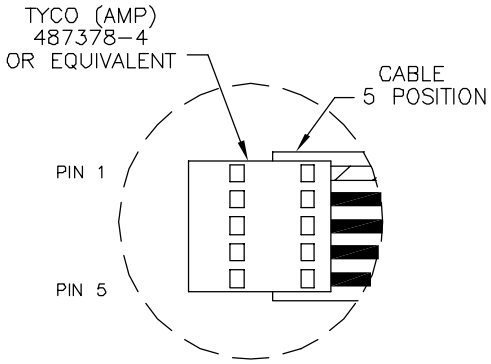

DETAIL A
NTS

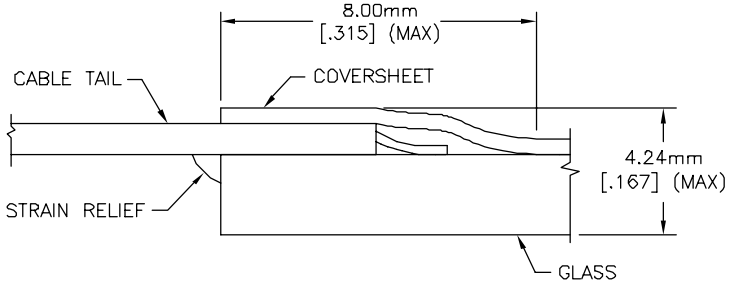

SECTION B-B
NTS

UNLESS OTHERWISE SPECIFIED:
DIMENSIONS ARE IN mm [IN]

elo TOUCHSYSTEMS
MS500299
01/19/04
DWG REV: E